ENGLISH

WESTTECH

Forest technology & landscape maintenance

NEXT TECH

Welcome to the world of Westtech®!

We do more than develop and manufacture robust forestry and landscaping equipment.

Individual customer service is our primary factor of success. Every product range is developed by the experienced Westtech® team of engineers, always in close collaboration with you - our customers. It is our goal to continuously optimise the product range according to customer requirements and the application areas.

MADE IN AUSTRIA
Austrian quality products by Westtech®.
Development and production from one source guarantee the highest quality standards and the associated long service life of the products.

NEXT TECH
Become familiar with the reliability of Woodcracker®, Mowblower® and Mulcher!
Westtech® products set themselves apart through innovative technology.
For us, NEXT TECH means, to be a step ahead.

Content

WOODCRACKER® C	Efficient cutting head	4 – 5
WOODCRACKER® CL	Swift cutting head for weak wood	6 – 7
WOODCRACKER® CB	Flexible cutting head for weak wood	8 – 9
WOODCRACKER® CS	Grapple saw	10 – 11
WOODCRACKER® CS SMART	Grapple saw for telescopic handler attachment	12 – 13
WOODCRACKER® CS COMPACT	Grapple saw for excavator attachment	14 – 15
WOODCRACKER® TK	Attachment coupler	16 – 17
WOODCRACKER® L	Wood splitter	18 – 19
WOODCRACKER® W	Wood splitting grapple	20 – 21
WOODCRACKER® S	Root stock device	22 – 23
WOODCRACKER® R	Root stock clearing device	24 – 25
WOODCRACKER® G	Clearing rake	26 – 27
MULCHER	Green care	28 – 29
MOWBLOWER®	The mower with a blower	30 – 31
WESTTECH	Worldwide	32 – 33
WESTTECH	Production	34 – 35

WOODCRACKER® C

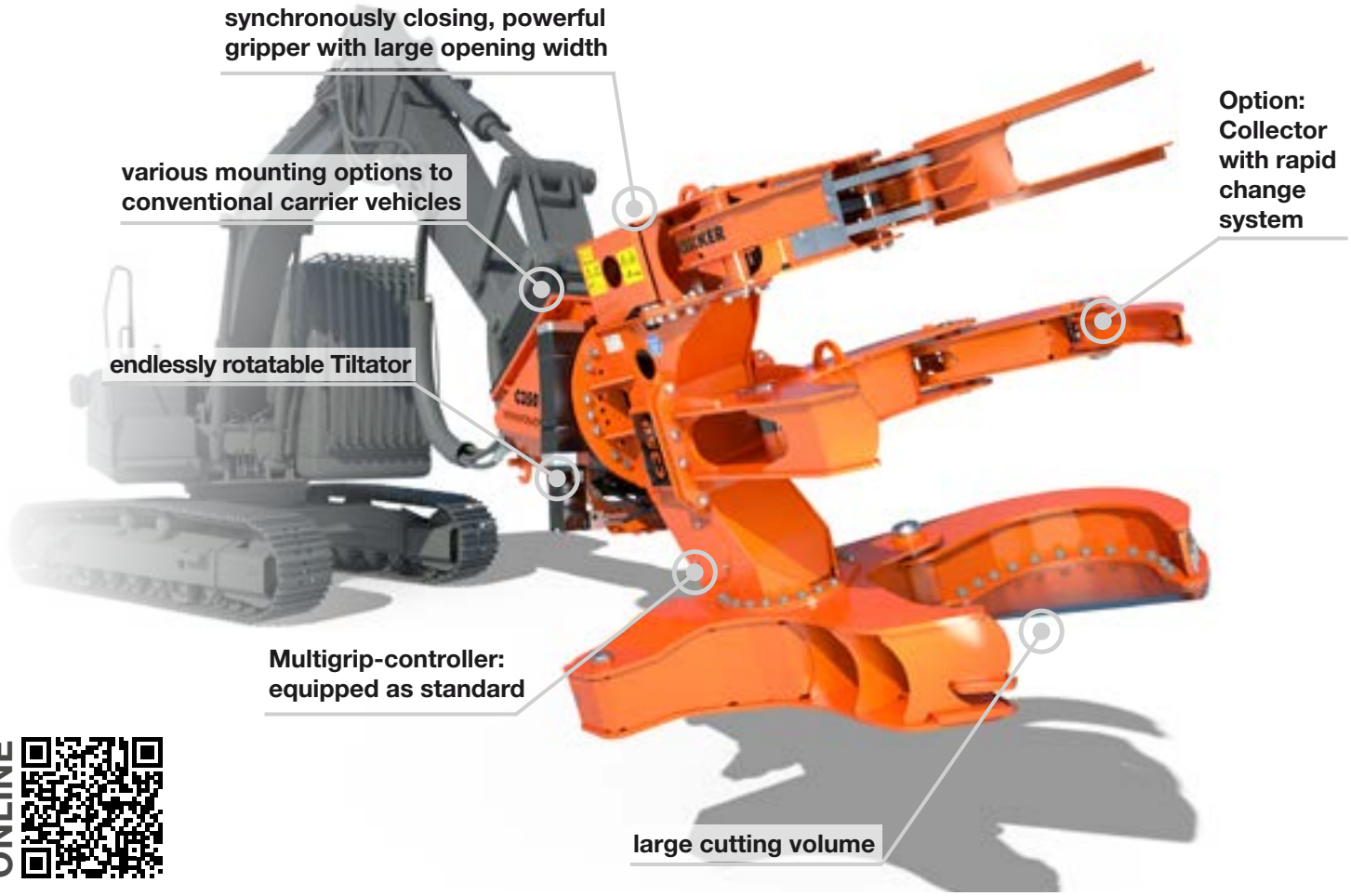

ONLINE

KEY FACTS

- Proper and simple connection at the headstock.
- Attachable to standard excavators, only four hydraulic connections needed (including all options).
- Replaceable, high-strength blade, easy to sharpen.
- KTL-primed (cathodic dip-coating) and powder coating. Made of high-strength Hardox® steel.
- Low-wear and low-service, robust and long-lasting.
- Additional occupancy of the carrier vehicle.

OPTIONS

- Autospeed:
  allows faster closing of the cutting mechanism in weak wood.
- Collector (C350 - C550 with rapid change system):
  Used to work fast in weak wood and to bunch material.
- Four different mounting options.

APPLICATION AREAS

- Conventional harvest of trees and bushes.
- Harvest of short rotation plantations.
- In rough terrain, hill areas and bog areas.
- Maintenance along traffic roads and routes.
- Large-scale harvest of forest areas.
- Problematic and dangerous tree felling.
- Cultivation and landscape maintenance.
- Bunched and organized deposition due to collecting function.
- In places, that require to remove the tree in an upright position (to protect the surrounding area).

The efficient cutting head for harvesting trees and bushes.

Sample applications from practice.

Woodcracker® C during wide-range harvest.

In marshland.

Tree care along traffic routes.

Infrastructure maintenance.

Certified quality TEST kwf

Patented.

• available - not available

Technical Data WOODCRACKER® C	C 250	C 350	C 450	C 550	
Cutting diametre soft wood	330	400	500	600	mm
Cutting diametre hard wood	280	350	450	550	mm
Gripper opening	930	1430	1600	1600	mm
Diametre of shears	450	700	800	900	mm
Weight (base – full equipment)	580 - 970	1150 - 1620	1760 - 2350	2000 - 2620	kg
Recommended pump flow capacity [1]	50 - 100	70 - 150	80 - 160	100 - 190	l/min.
Recommended pump flow capacity for optional functions[1]	35 - 50	45 - 60	45 - 60	50 - 70	l/min.
Recommended operating pressure main circuit	280	280	280	280	bar
Service weight of carrier vehicle [2]	7 - 15	14 - 20	20 - 25	24 - 30	t
Multigrip	integrated	integrated	integrated	integrated	
Optional: Autospeed	•	•	•	•	
Optional: Cylinder swivel mechanism	• 2 x 48°	• 2 x 48°	• 2 x 48°	• 2 x 48°	
Optional: Tiltator	• endlessly rotatable	• endlessly rotatable	• endlessly rotatable	• endlessly rotatable	
Optional: Power-Tiltator	-	• endlessly rotatable	• endlessly rotatable	• endlessly rotatable	
Optional: Collector	•	•	•	•	

[1] Depending on operating mode or equipment. [2] Depending on specifications of the operation vehicle.

Technical data and illustrations are not binding. Subject to changes for reasons of further development.

WOODCRACKER® CL

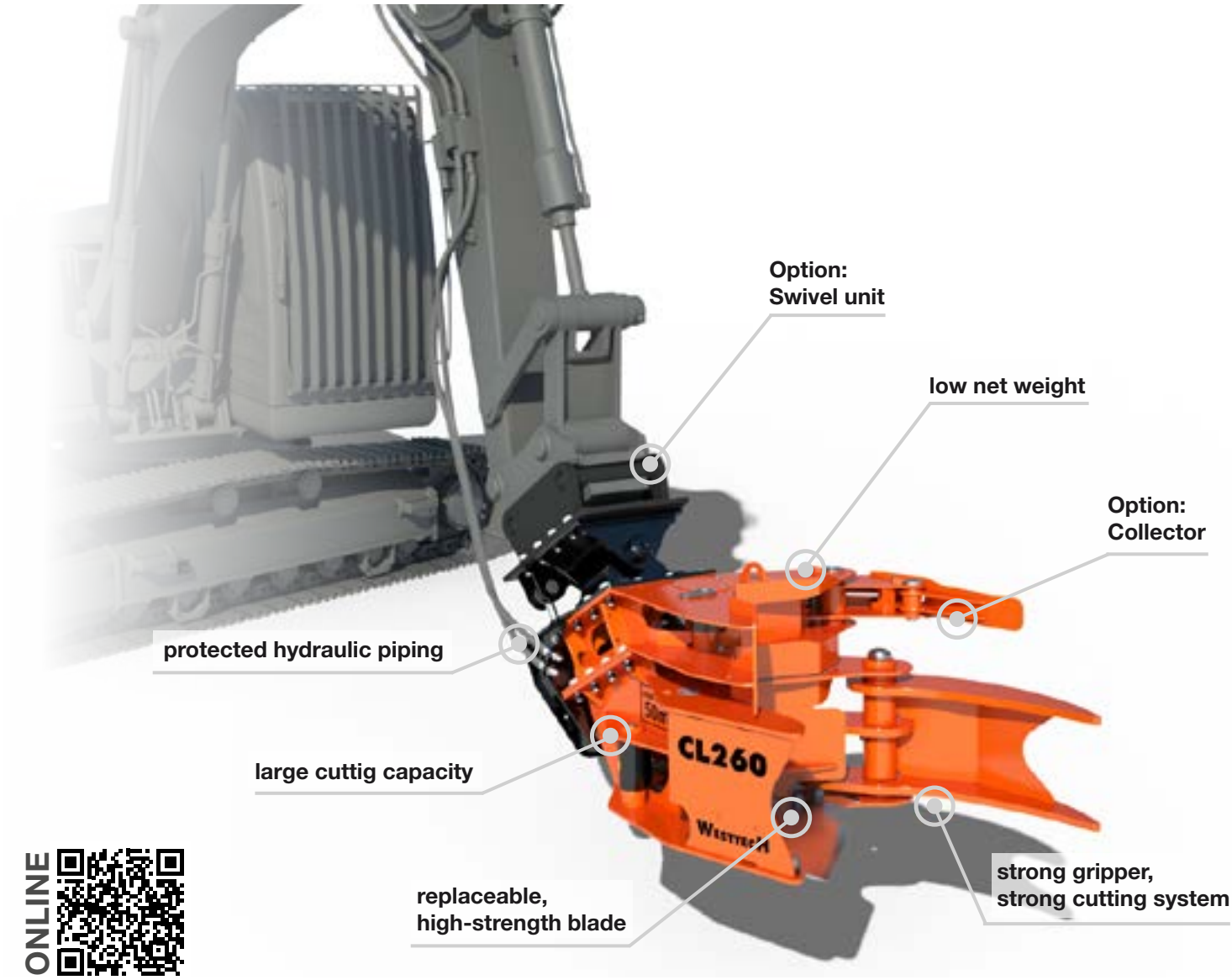

ONLINE

KEY FACTS

- Various mounting options (eg. excavator, farm loader).
- Due to low net weight, the Woodcracker® CL is mountable to farm loaders.
- The cutting system uses a replaceable and high-strength blade. It is easy to sharpen, resistant and impervious to dirt.
- Proper and simple connection at the headstock with ideal mounting angle.
- KTL-primed (cathodic dip-coating) and powder coating. Made of high-strength Hardox® steel.
- Low-wear and low-service, robust and long-lasting.

APPLICATION AREAS

- Fast harvest of small trees and bushes.
- Harvest of short rotation plantations.
- In rough terrain, hill areas and in bog areas.
- Cultivation and landscape maintenance.
- For agricultural use on a farm loader.
- Easy infrastructure maintenance.

Woodcracker® CL190 is also attachable to farm loaders.

Caution: Woodcracker® CL is not suitable for dangerous tree felling. Secure hold of cut material can not be guaranteed. In this case we recommend our Woodcracker® C/CS series.

The swift and light-weighted cutting head for agricultural use.

Sample applications from practice.

Woodcracker® CL is particularly suitable for the harvest of short rotation plantations.

For weak wood up to 32cm.

Cost-benefit efficiency.

Optional available with Collector.

certified quality TEST kwf

Patented.

• available - not available

Technical Data **WOODCRACKER® CL**	**CL 190**	**CL 260**	
Cutting diametre soft wood	250	320	mm
Cutting diametre hard wood	190	260	mm
Gripper opening = Diametre of shears	685	760	mm
Weight (base – full equipment)	210 - 310	350 - 630	mm
Recommended pump flow capacity (main circuit)	40 - 80	50 - 100	kg
Recommended operating pressure main circuit	250	280	l/min.
Recommended pump flow capacity (auxiliary circuit)	20 - 30	40 - 60	l/min.
Recommended operating pressure (auxiliary circuit)	200	200	bar
Service weight of carrier vehicle	2,5 - 7,5	6 - 14	t
Optional: Autospeed	•	•	
Optional: Collector	•	•	
Optional: Cylinder swivel mechanism	• 2 x 40°	• 2 x 48°	

[1] Depending on operating mode or equipment. [2] Depending on specifications of the operation vehicle.

Technical data and illustrations are not binding. Subject to changes for reasons of further development.

WOODCRACKER® CB

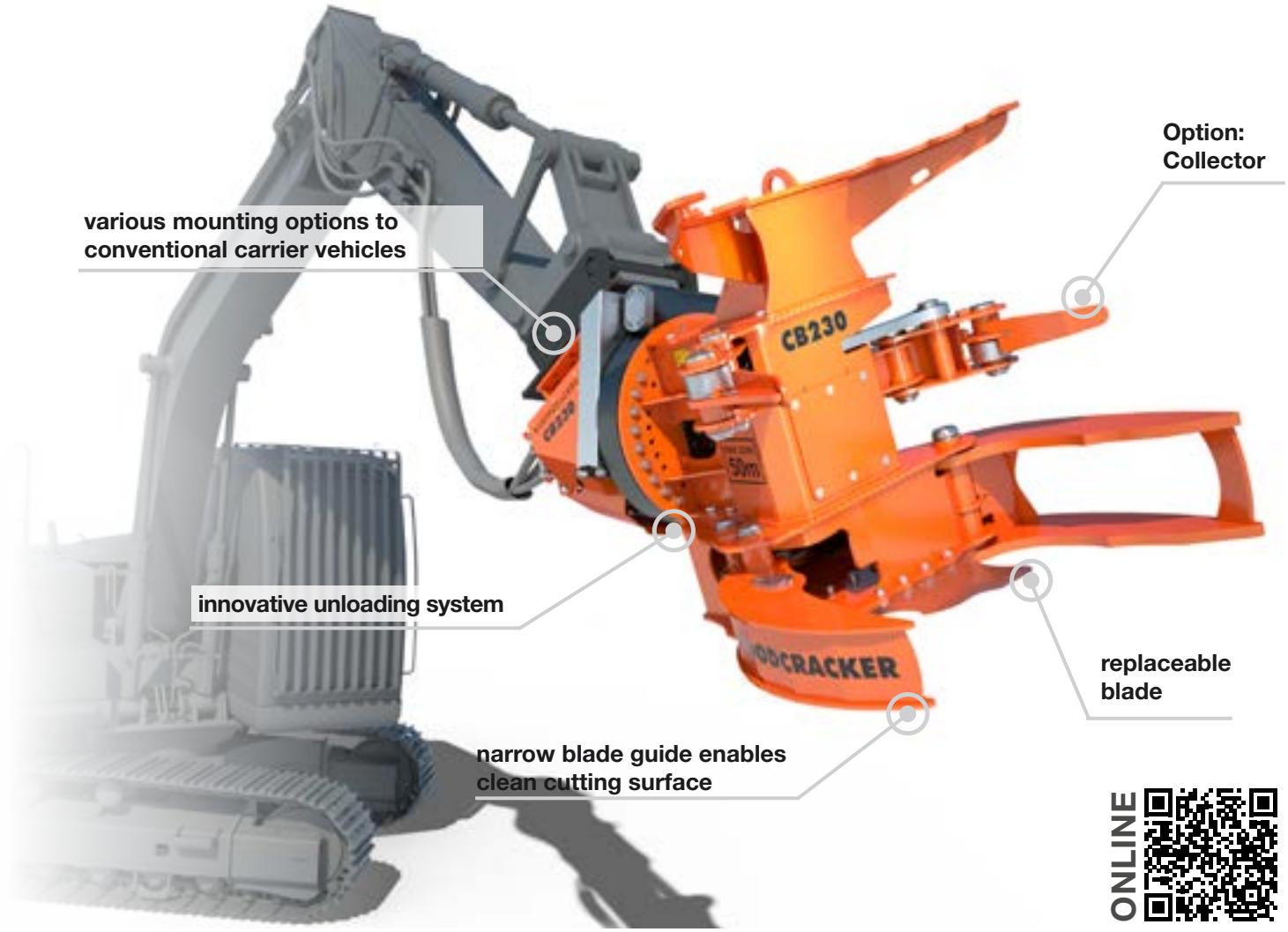

ONLINE

KEY FACTS

- Various mounting options (eg. excavator, farm loader).
- Low-service and low-wear due to special cutting system.
- Low net weight.
- Simultaneous harvest of several trees and bushes in one step using the collecting function saves time.
- Clean cut surface enables the plant to sprout again.
- Eco-friendly harvest maintaining soil fertility.
- Cost-effective harvesting method.
- Also applicable in mini-forests for easy maintenance.

APPLICATION AREAS

- Fast harvest of small trees and bushes.
- Harvest of short rotation plantations.
- In rough terrain, hill areas and in swamplands.
- Cultivation and landscape maintenance.
- For agricultural use on a farm loader.
- Easy infrastructure maintenance.
- Large-scale harvest of forest areas.

OPTION

- Three different mounting options.

Caution: Woodcracker® CB is not suitable for dangerous tree felling. Secure hold of cut material can not be guaranteed. In this case we recommend our Woodcracker® C/CS series.

The flexible cutting head for the harvest of bushes and small trees as well as for landscaping.

Sample applications from practice.

Woodcracker® CB is particularly suitable for the easy harvest of small trees and bushes.

Suitable for forest crane attachment.

Optional with collector.

Harvest of short rotation coppice.

Certified quality TEST kwf

Patented.

● available - not available

Technical Data WOODCRACKER® CB	CB 150 cardanic	CB 150	CB 230	CB 300	
Cutting diametre soft wood	150	220	280	350	mm
Cutting diametre hard wood	120	170	230	300	mm
Gripper opening = Diametre of shears	800	800	1100	1280	mm
Weight (base – full equipment)	310	300 - 560	600 - 950	900 - 1400	kg
Recommended pump flow capacity [1]	30 - 60	40 - 80	60 - 120	80 - 150	l/min.
Recommended pump flow capacity for optional functions[1]	-	35 - 50	40 - 60	40 - 60	l/min.
Recommended operating pressure (main circuit)	190	250	280	280	bar
Service weight of carrier vehicle [2]	attachment to crane	4,5 - 9	7 - 15	14 - 22	t
Optional: Collector	-	●	●	●	
Optional: Cylinder swivel mechanism	-	● 2 x 48°	● 2 x 48°	● 2 x 48°	
Optional: Tiltator	-	-	● endlessly rotatable	● endlessly rotatable	

[1] Depending on operating mode or equipment. [2] Depending on specifications of the operation vehicle.

Technical data and illustrations are not binding. Subject to changes for reasons of further development.

WOODCRACKER® CS

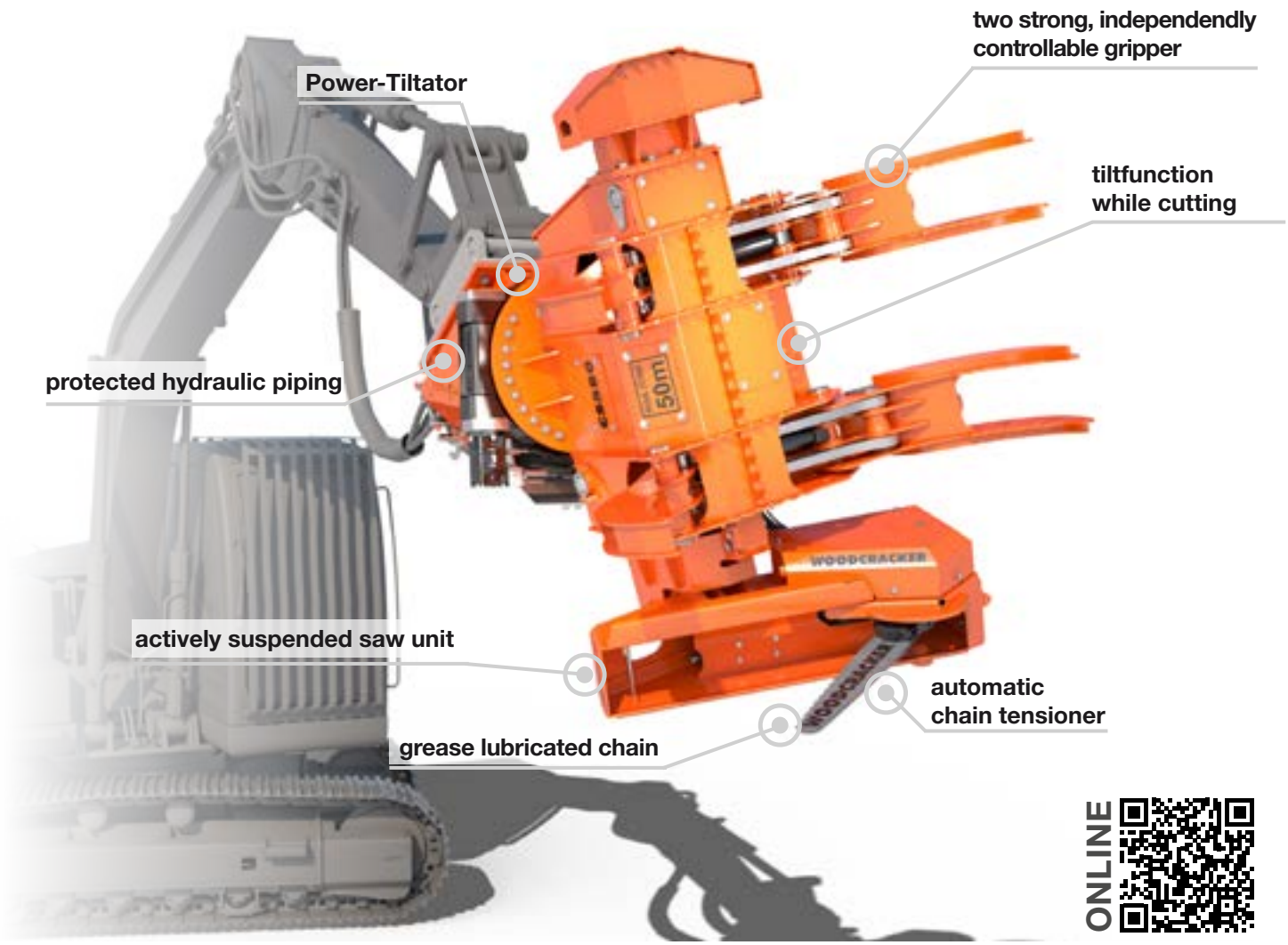

KEY FACTS

- Easy attachment to conventional excavators.
- The rigid mounting of the Woodcracker® CS to the excavator makes it possible to withdraw parts of the tree vertically from its setting. In this way, trees or objects nearby are not damaged – perfect for fellings due to safety reasons.
- Tiltfunction avoids clamping of the saw when cutting.
- Cutting diametre up to 75 cm.
- Removable guide bracket.
- Ideal transport position for a safe transport.
- KTL-primed (cathodic dip-coating) and powder coating. Made of high-strength Hardox® steel.
- Low-wear and low-service, robust and long-lasting.
- Grease lubrication does not cause oil fogging and lubricates the chain in any position.

APPLICATION AREAS

- Safe removal of trees in segments, in every position or angle.
- Harvest of tree trunks.
- In rough terrain, hill areas and swamplands.
- Maintenance work along traffic roads and routes.
- Tree felling due to safety reasons.
- Quick processing of the already logged tree lying on the ground.

OPTION

- Three different mounting options.

The grapple saw with oscillatingly suspended saw unit for tree fellings due to safety reasons.

Sample applications from practice.

The strong gripper holds the tree firmly.

For large logs and safety tree fellings.

Rapid chopping and piling.

Removal of trees in segments.

Certified quality TEST kwf

Patented.

• available - not available

Technical Data WOODCRACKER® CS	CS 580	CS 780	
Cutting diametre	580	750	mm
Gripper opening	1430	1600	mm
Tiltator	endlessly rotatable	endlessly rotatable	
Weight (Base – Full equipment)	1400 - 1500	2000 - 2200	kg
Recommended pump flow capacity [1]	120 - 170	120 - 170	l/min.
Recommended pump flow for optional functions [1]	50 - 70	50 - 70	l/min.
Recommended operating pressure	280	280	bar
Service weight of carrier vehicle [2]	14 - 22	20 - 28	t
Tiltfunktion für Schneidevorgang	automatically	automatically	
Saw unit	actively suspended	actively suspended	
Chain lubrication of saw	grease	grease	
Optional: Power-Tiltator	• endlessly rotatable	• endlessly rotatable	

[1] Depending on operating mode or equipment. [2] Depending on specifications of the operation vehicle.

Technical data and illustrations are not binding. Subject to changes for reasons of further development.

WOODCRACKER® CS smart

attachment to **telescopic handlers**

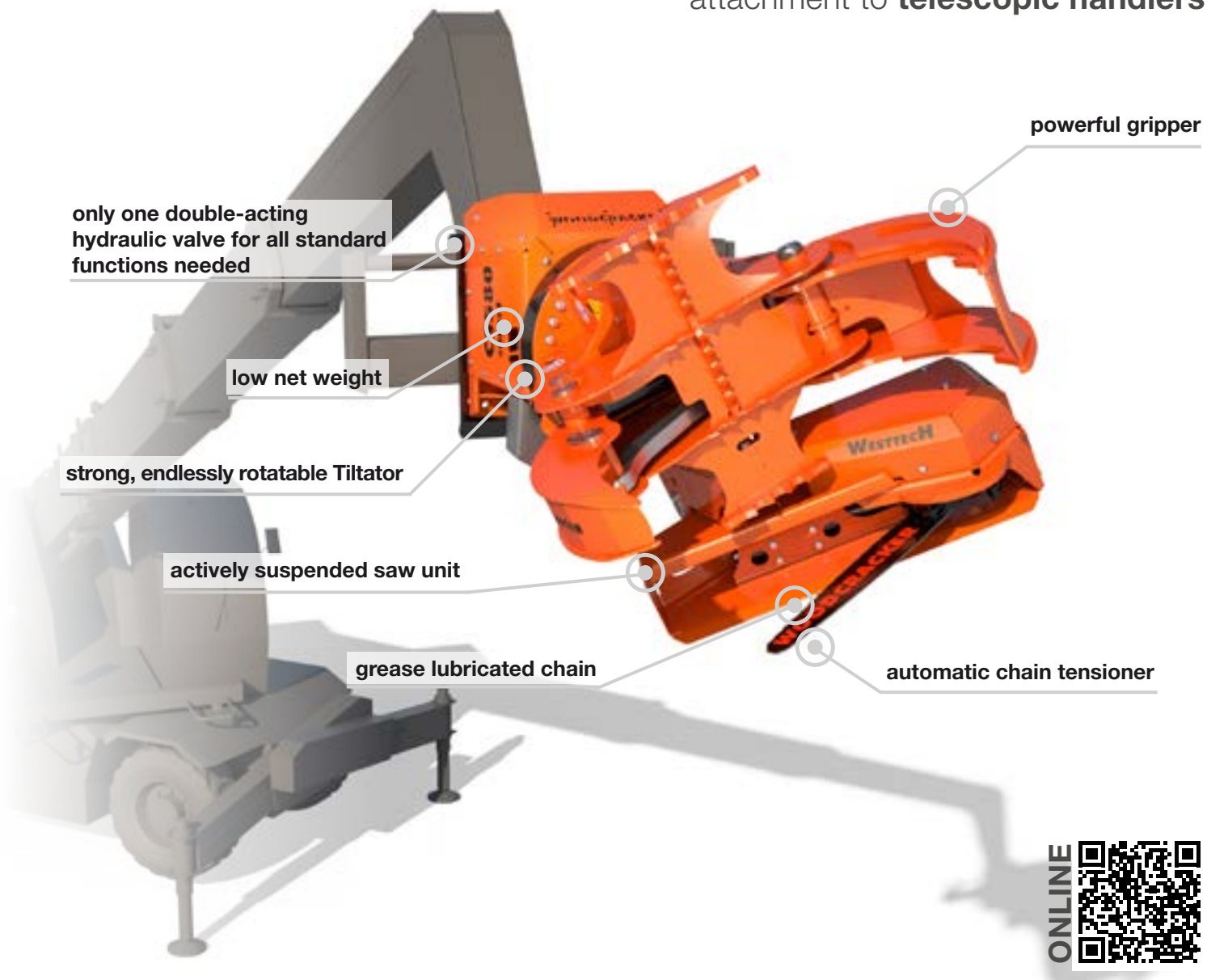

ONLINE

KEY FACTS

- Particularly developed for tree fellings due to safety reasons.
- Designed to be attached to telescopic handlers.
- Various mounting options adapted to the carrier vehicle. Optional: mounting frames and adapter plates for common carrier vehicles.
- Only one double-acting hydraulic valve needed.
- Made of high-strength Hardox® steel.
- Robust technology, low-wear and low-service.
- KTL-primed (cathodic dip-coating) and powder coating.
- Plug-and-play connection.
- Due to Tiltator endlessly rotatable.

APPLICATION AREAS

- Safe removal of trees in several parts.
- Problematic tree fellings in urban and residential areas.
- Maintenance work along traffic roads and routes.
- Felling of dangerous trees.

OPTION

- Three different mounting options.

The extra light-weighted grapple saw for attachment to **rotatable telescopic handlers.**

Sample applications from practice.

Safe removal of trees in several parts.

Designed for safety tree fellings.

Rapid chopping and piling.

Powerful gripper for strong grip.

Automatic chain tensioner.

Safe handling with high operating range.

Certified quality TEST kwf

Patented.

• available - not available

Technical Data **WOODCRACKER® CS smart**	**CS 750 smart** telehandler-mounted	
Cutting diametre	750	mm
Gripper opening	1280	mm
Tiltator	endlessly rotatable	
Weight (base – full equipment)	820 - 980	kg
Recommended pump flow capacity [1]	65 - 110	l/min
Recommended pump flow capacity for optional functions[1]	-	l/min
Recommended operating pressure	230 - 280	bar
Service weight of carrier vehicle [2]	15 - 25	t
Saw unit	actively suspended	
Chain lubrication of saw	grease	
Optional: Power-Tiltator	• endlessly rotatable	

[1] Depending on operating mode or equipment.
[2] Depending on specifications of the operation vehicle.

Technical data and illustrations are not binding. Subject to changes for reasons of further development.

WOODCRACKER® CS compact

attachment to **excavators**

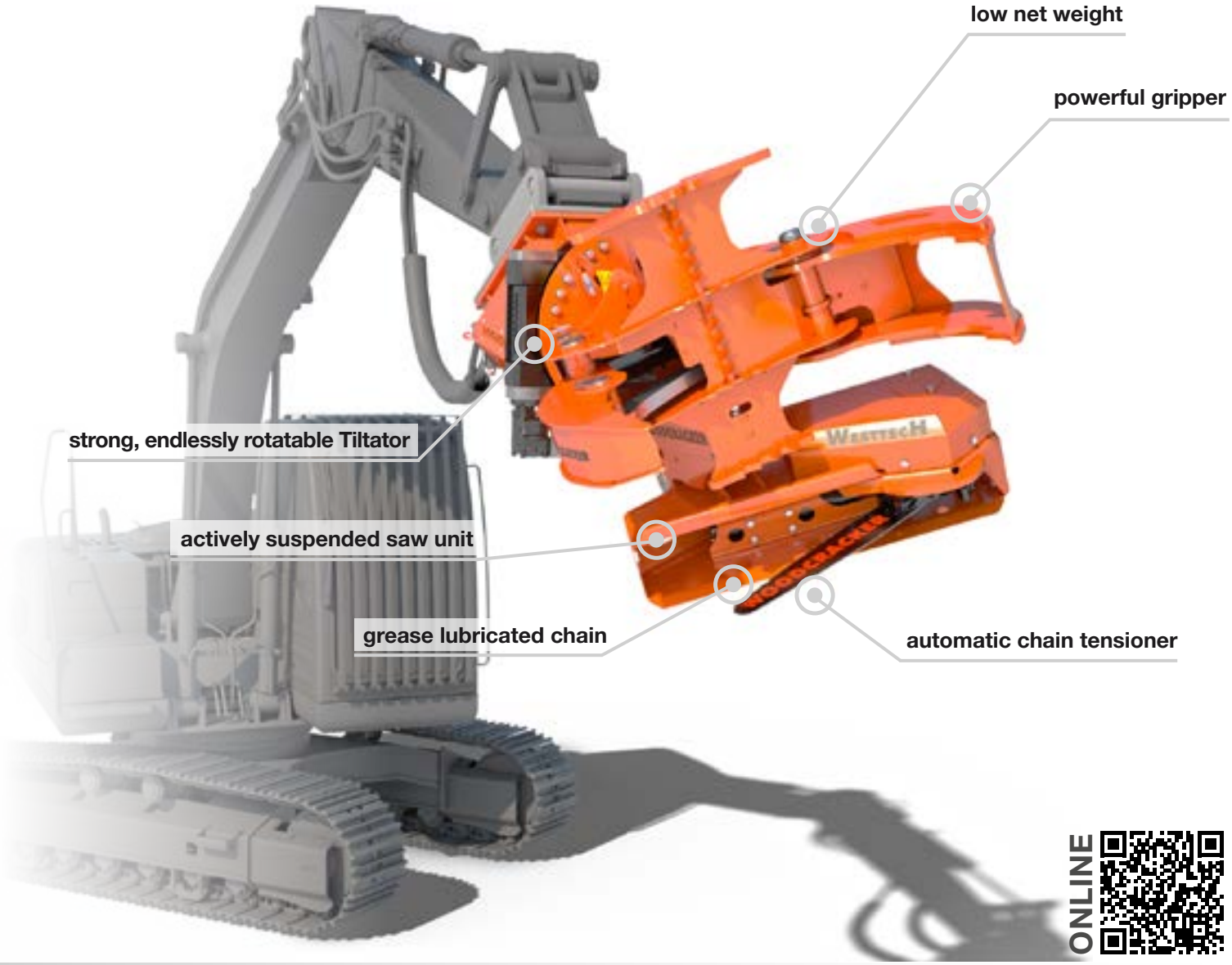

ONLINE

KEY FACTS

- Particularly developed for tree fellings due to safety reasons.
- Designed to be attached to excavators.
- Various mounting options adapted to the carrier vehicle. Optional: mounting frames and adapter plates for common carrier vehicles.
- Made of high-strength Hardox® steel.
- Robust technology, low-wear and low-service.
- KTL-primed (cathodic dip-coating) and powder coating.
- Plug-and-play connection.
- Due to Tiltator endlessly rotatable.

APPLICATION AREAS

- Safe removal of trees in several parts.
- Harvest of tree trunks.
- In rough terrain, hill areas and swamplands.
- Maintenance work along traffic roads and routes.
- Felling of dangerous trees.
- Quick processing of the already logged tree lying on the ground.

OPTION

- Three different mounting options.

The extra light-weighted grapple saw for attachment to **excavators**.

Sample applications from practice.

Safe removal of trees in several parts.

Grease lubricated chain.

Rapid chopping and piling.

Designed for safety tree fellings.

Powerful gripper for strong grip.

Various mounting options.

Certified quality TEST kwf

Patented.

• available - not available

Technical Data **WOODCRACKER® CS compact**	**CS 610 compact** excavator-mounted	
Cutting diametre	610	mm
Gripper opening	1280	mm
Tiltator	endlessly rotatable	
Weight (base – full equipment)	900 - 1000	kg
Recommended pump flow capacity [1]	65 - 110	l/min
Recommended pump flow capacity for optional functions[1]	40 - 60	l/min
Recommended operating pressure	230 - 280	bar
Service weight of carrier vehicle [2]	15 - 20	t
Saw unit	actively suspended	
Chain lubrication of saw	grease	
Optional: Power-Tiltator	• endlessly rotatable	

[1] Depending on operating mode or equipment.
[2] Depending on specifications of the operation vehicle.

Technical data and illustrations are not binding. Subject to changes for reasons of further development.

WOODCRACKER® TK

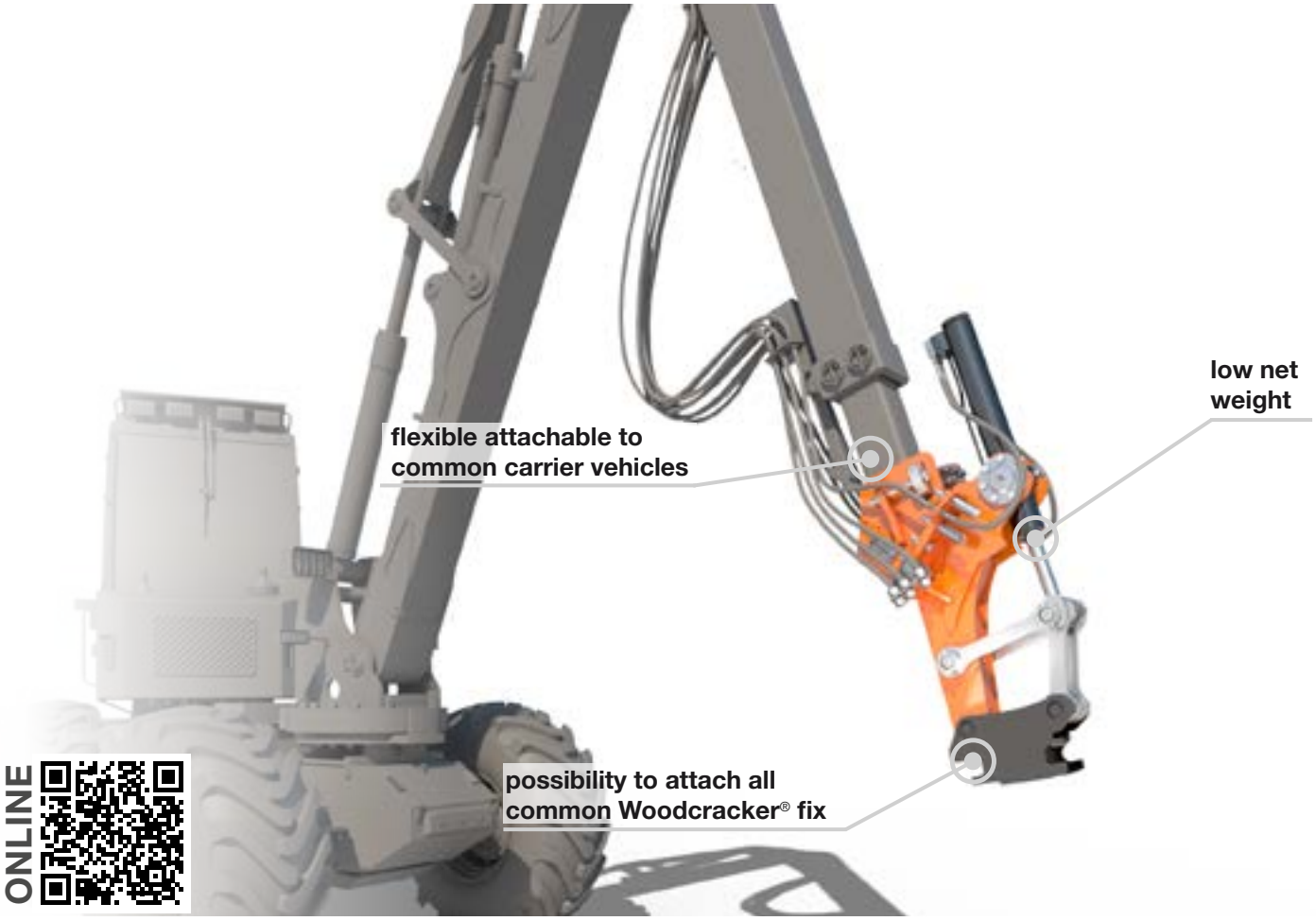

ONLINE

KEY FACTS

- Flexible mounting options to common machines.
- Enables mounting of attachments to carrier vehicles with boom without tilt mechanism.
- KTL-primed (cathodic dip-coating) and powder coating. Made of high-strength Hardox® steel.
- Low-wear and low-service, robust and long-lasting.

APPLICATION AREAS

- Connection adapter for harvester, telescopic handlers and re-handling excavators - vehicles with cardanic attachment.
- For Woodcracker® machines, eg. C / CL / CB / W and Mulcher.
- For all other rigid-mounted excavator attachments, eg. excavator shovels, forest mulchers, etc.

OPTION

- Mounting brackets for all common carrier vehicles.

The attachment coupler for harvester, telescopic handler and re-handling excavator.

Sample applications from practice.

The adapter combines cardanic and rigid mounting.

Producer-independent mountable.

For vehicles with cardanic attachment.

Work flexible and fast.

Low net weight.

Made of high-strength steel.

Technical Data **WOODCRACKER® TK**		
Inclination	max. 160	degree
Net weight (depending on attachment)	> 380	kg
Recommended pump flow capacity	70 - 120	l/min
Recommended operating pressure	280	bar
Service weight of carrier vehicle	up to 20	t

● available - not available

Technical data and illustrations are not binding. Subject to changes for reasons of further development.

WOODCRACKER® L

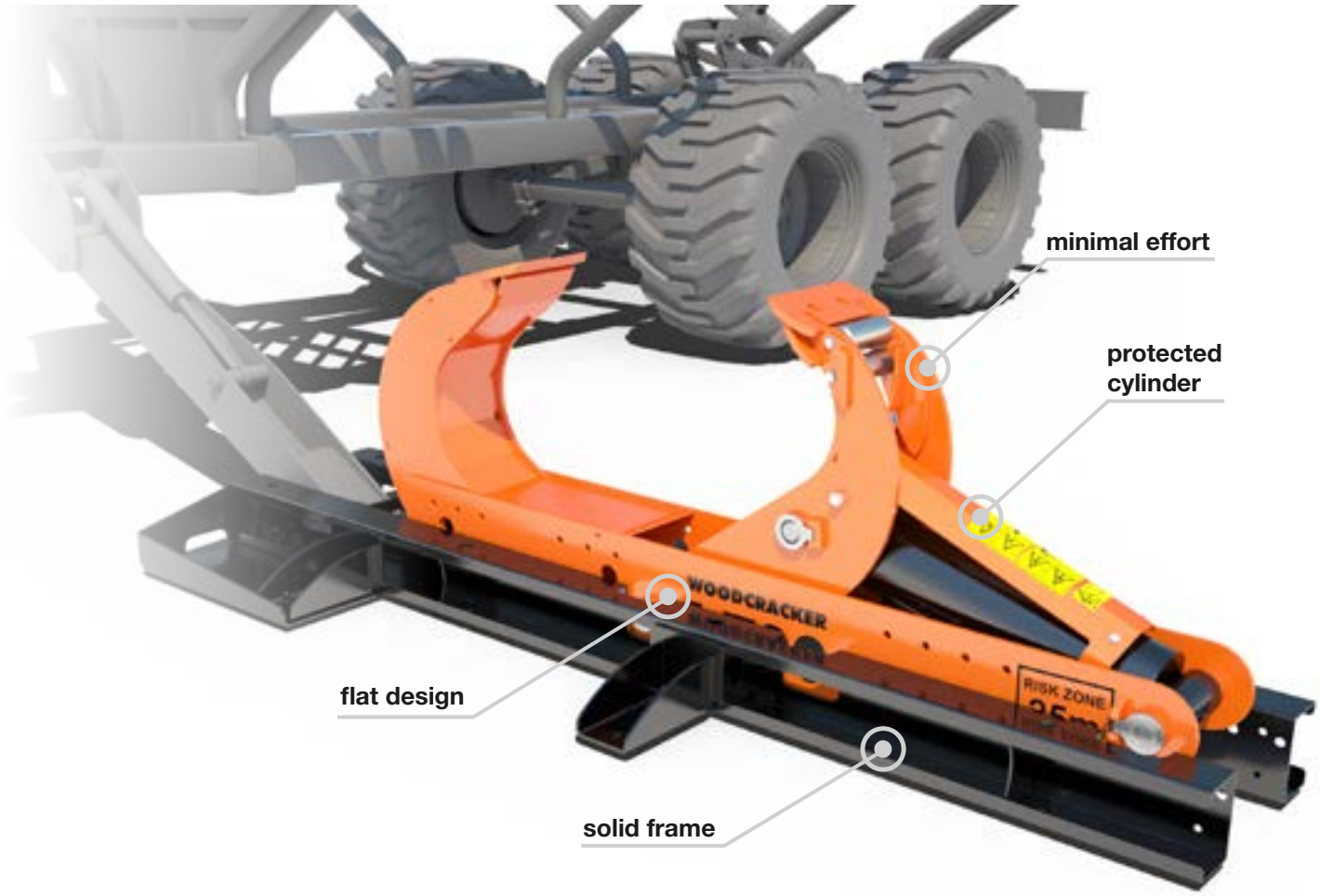

ONLINE

KEY FACTS

- Available in different sizes suitable for the carrier vehicle.
- Optimal cost/benefit ratio.
- Made of high-strength Hardox®-steel.
- Robust and proven technology, low-wear and low-service.
- KTL-primed (cathodic dip-coating) and powder coating.
- Plug-and-play connection.
- Useful options available.

APPLICATION AREAS

- Splitting thick wood trunks.
- Can be used in all harvest and processing methods of strong wood.
- Pre-splitting wood for further processing of split logs or chipped wood material.
- Easy supply of the pre-split material to chippers.
- Pre-splitting wood allows a natural drying process.

The compact wood splitter to split thick trunks.

Sample applications from practice.

The trunk can be split and loaded in one work step.

Fast and flexible.

Low effort for splitting.

Optimal cost-benefit-ratio.

Patented.

● available - not available

Technical Data **WOODCRACKER® L**	**L 540**	**L 700**	**L 920**	**L 1200**	
Tongs opening	540	700	900	1200	mm
Splitting force (depending on operating pressure)	up to 14	up to 22	up to 22	up to 33	t
Weight (basic model)	195	285	370	1100	kg
Recommended pump flow capacity	~ 25 - 60	~ 25 - 60	~ 25 - 60	~ 80 - 150	l/min.
Recommended operating pressure	180 - 240	180 - 240	180 - 240	220 - 270	bar
Optional: Standing fixture	●	●	●	●	
Optional: Excavator attachment	●	●	●	-	
Optional: Farm loader attachment	●	●	-	-	

Technical data and illustrations are not binding. Subject to changes for reasons of further development.

WOODCRACKER® W

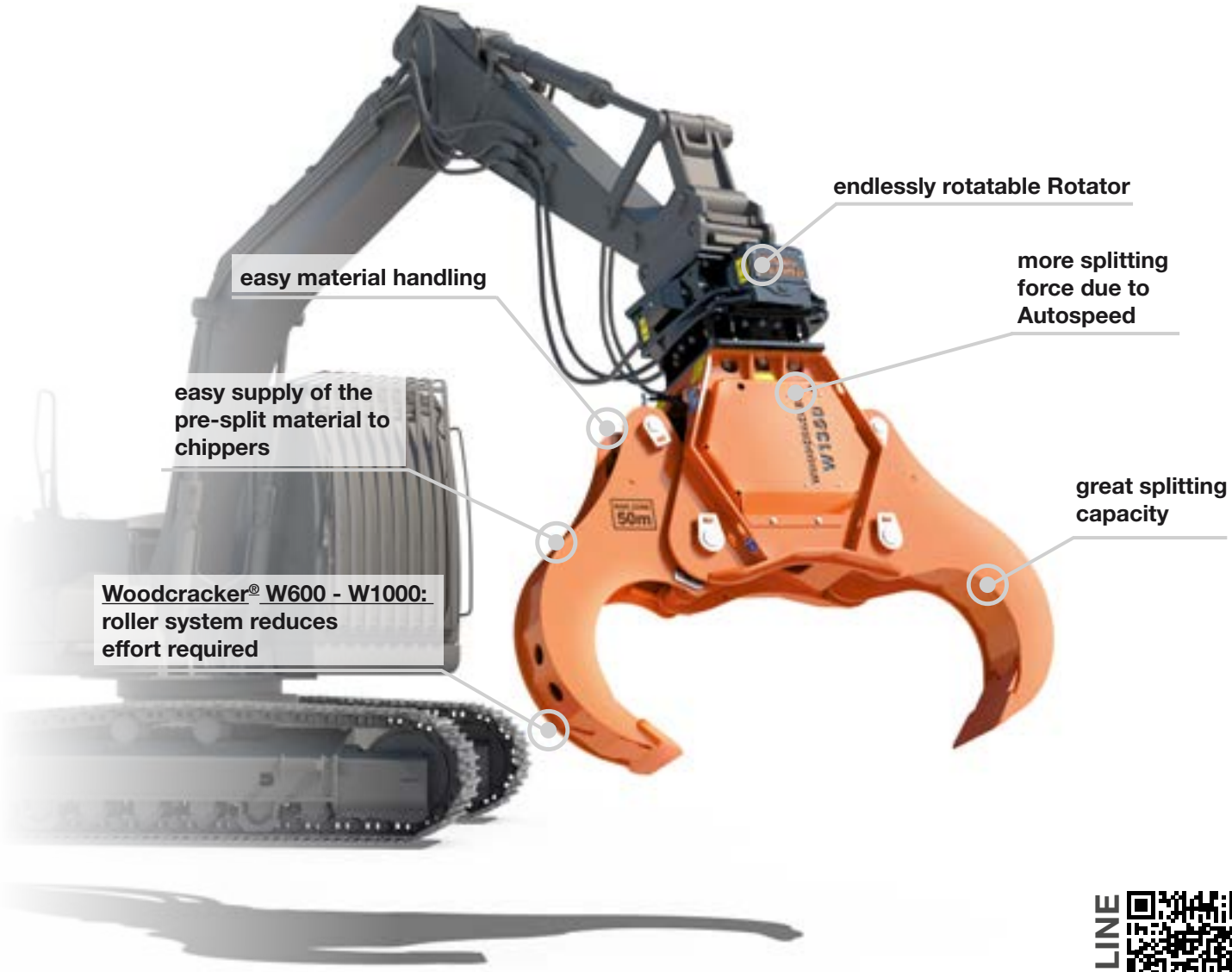

ONLINE

KEY FACTS

- Available in different sizes suitable for the carrier vehicle.
- Made of high-strength Hardox® steel.
- Robust and proven technology, low-wear and low-service.
- Proper and simple connection.
- KTL-primed (cathodic dip-coating) and powder coating.
- Plug-and-play connection.
- Useful options available.

APPLICATION AREAS

- Splitting thick wood trunks with minimal effort.
- Can be used in all harvest and processing methods of strong wood.
- Pre-splitting wood allows a natural drying process and as a result an increase in biomass quality and energy yield.
- Splitting tongs can be used as a gripper.

The wood splitting tongs to split thick trunks.

Sample applications from practice.

Easy supply of the pre-split material in chippers.

Can be used as a gripper.

Splitting with minimal effort.

Versatile mounting possibilities.

Patented.

● available - not available

Technical Data WOODCRACKER® W	W600	W820	W1000	W1350	W1800	
Tongs opening	620	820	1040	1370	1830	mm
Splitting force at 240 bar	26	26	26	34	47*	t
Weight (basic model)	295	360	580	950	1990	kg
Recommended pump flow capacity	25 - 60	25 - 60	40 - 80	80 - 150	100 - 190	l/min.
Recommended operating pressure	190 - 250	190 - 250	190 - 250	220 - 270	240 - 300	bar
Service weight of carrier vehicle	6	10	14	20	30	max. t
Optional: Autospeed	●	●	●	-	-	
Optional: Rotator	●	●	●	●	●	

* At 320 bar working pressure

Technical data and illustrations are not binding. Subject to changes for reasons of further development.

WOODCRACKER® S

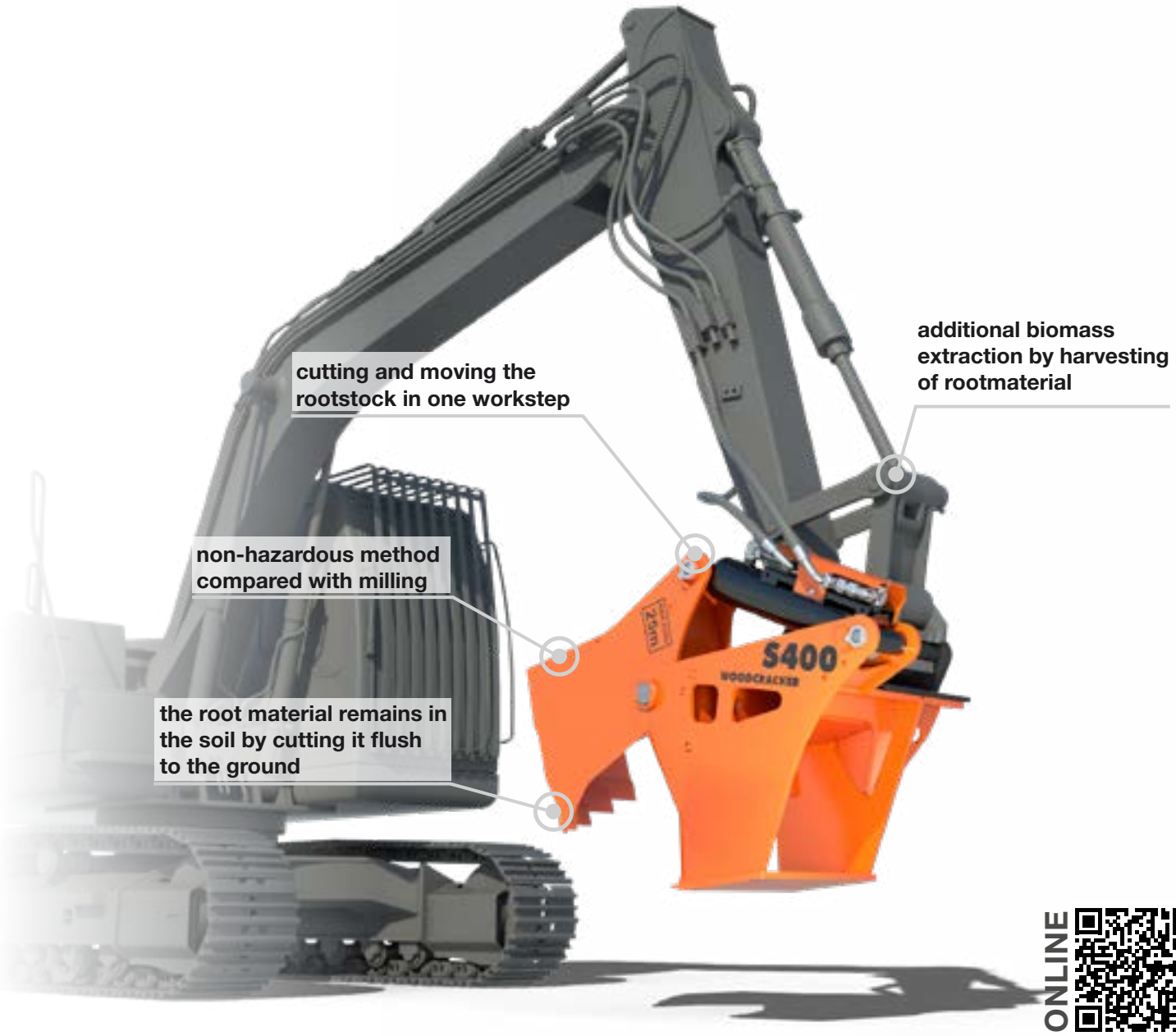

KEY FACTS

- Available in different sizes for the appropriate carrier vehicle.
- Made of high-strength Hardox® steel.
- Robust and proven technology, low-wear and low-service.
- KTL-primed (cathodic dip-coating) and powder coating.
- Easy attachment.

APPLICATION AREAS

- Clean cutting of root stock flush to the ground.
- Further processing and chipping of the root stock.
- Additional biomass mobilisation through the harvest of residual trunk wood.
- Usage in loose, sandy and erosion-prone soils.

The root stock device for ground-flush cutting and preparation of root stocks.

Sample applications from practice.

Developed for sandy and erosion-prone soils, as the root material remains in the soil.

Cutting and moving at once.

Additional biomass mobilisation.

Easy mounting to carrier vehicles.

● available - not available

Technical Data **WOODCRACKER® S**	**S 200**	**S 400**	
Tongs opening	410	600	mm
Cutting width	240	480	mm
Weight (basic model)	170	760	kg
Recommended pump flow capacity	~ 25 - 60	60 - 120	l/min.
Recommended operating pressure	180 - 240	240 - 270	bar
Service weight of carrier vehicle	1,5 - 6	max. 18	t

Technical data and illustrations are not binding. Subject to changes for reasons of further development.

WOODCRACKER® R

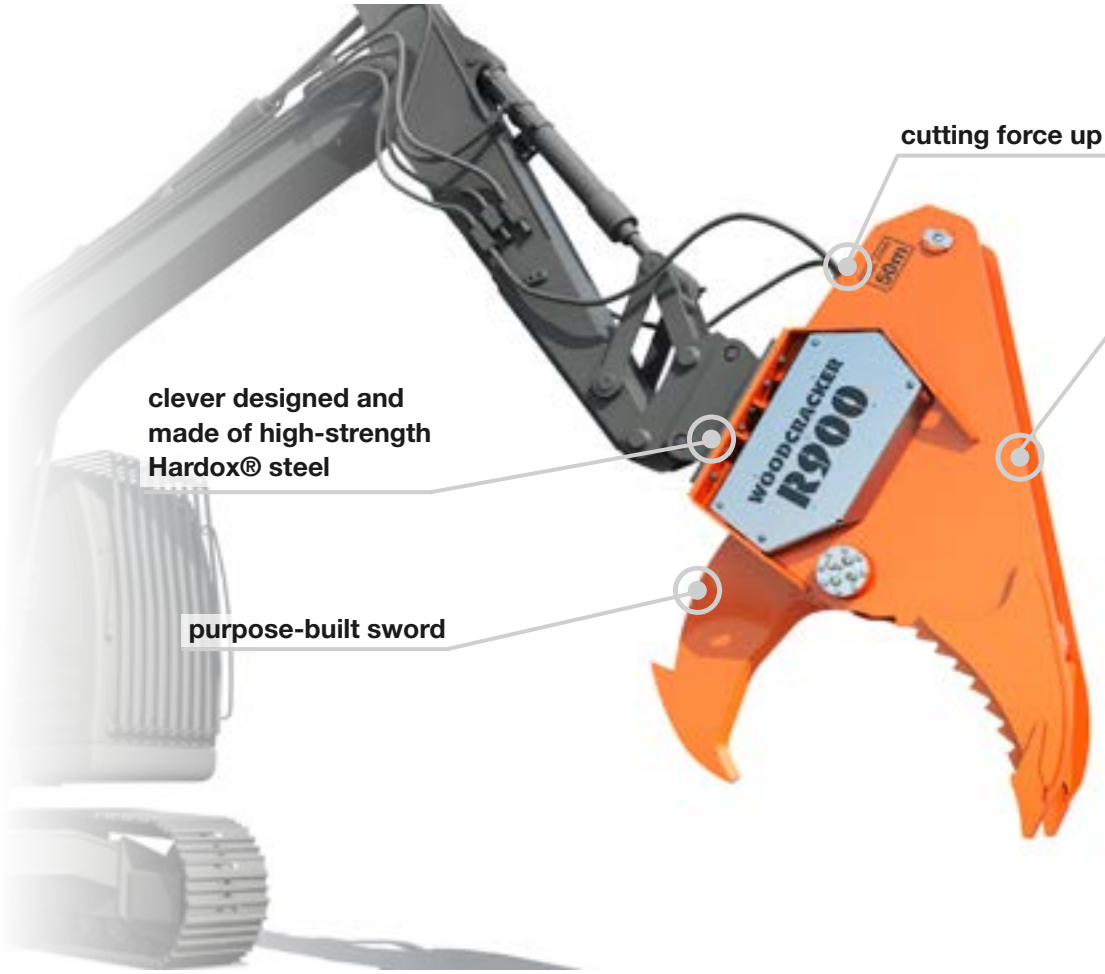

ONLINE

KEY FACTS

- Careful removal of the entire root stock from the ground without any damage.
- Through additional biomass mobilisation, another source of revenue is generated for the forestry business.
- Available in different sizes for the appropriate carrier vehicle.
- Made of high-strength Hardox® steel.
- Robust and proven technology, low-wear and low-service.
- Plug-and-play connection.

APPLICATION AREAS

- Removal of the entire root stock from the ground.
- Chipping the root stock for further processing by using a shredder.
- Reduction of the transport volume through pre-chipping.
- Large-scale recultivation measures.
- Cleaning the ground to let the plant inventory regrow.

ALTERNATIVE: RIPPER TOOTH

- Fast and cost-efficient ripper tooth.
- For temporary use.
- Low-wear, high-strength steel.
- Available in two sizes.

The root stock clearing device for harvest and preparation of biomass from root stocks.

Sample applications from practice.

Careful removal of the entire root stock from the ground.

Robust cutting unit.

Used for clearing the soil.

Chipping of the harvested material.

Technical Data **WOODCRACKER® R**	R 900	R 1300	
Tongs opening	955	1300	mm
Cutting force (depending on operating pressure)	up to 45	up to 65	t
Weight	1200	2100	kg
Recommended pump flow capacity	100 - 190	120 - 250	l/min.
Recommended operating pressure	240 - 280	250 - 310	bar
Service weight of carrier vehicle	25	30	max. t

• available - not available

Technical data and illustrations are not binding. Subject to changes for reasons of further development.

WOODCRACKER® G

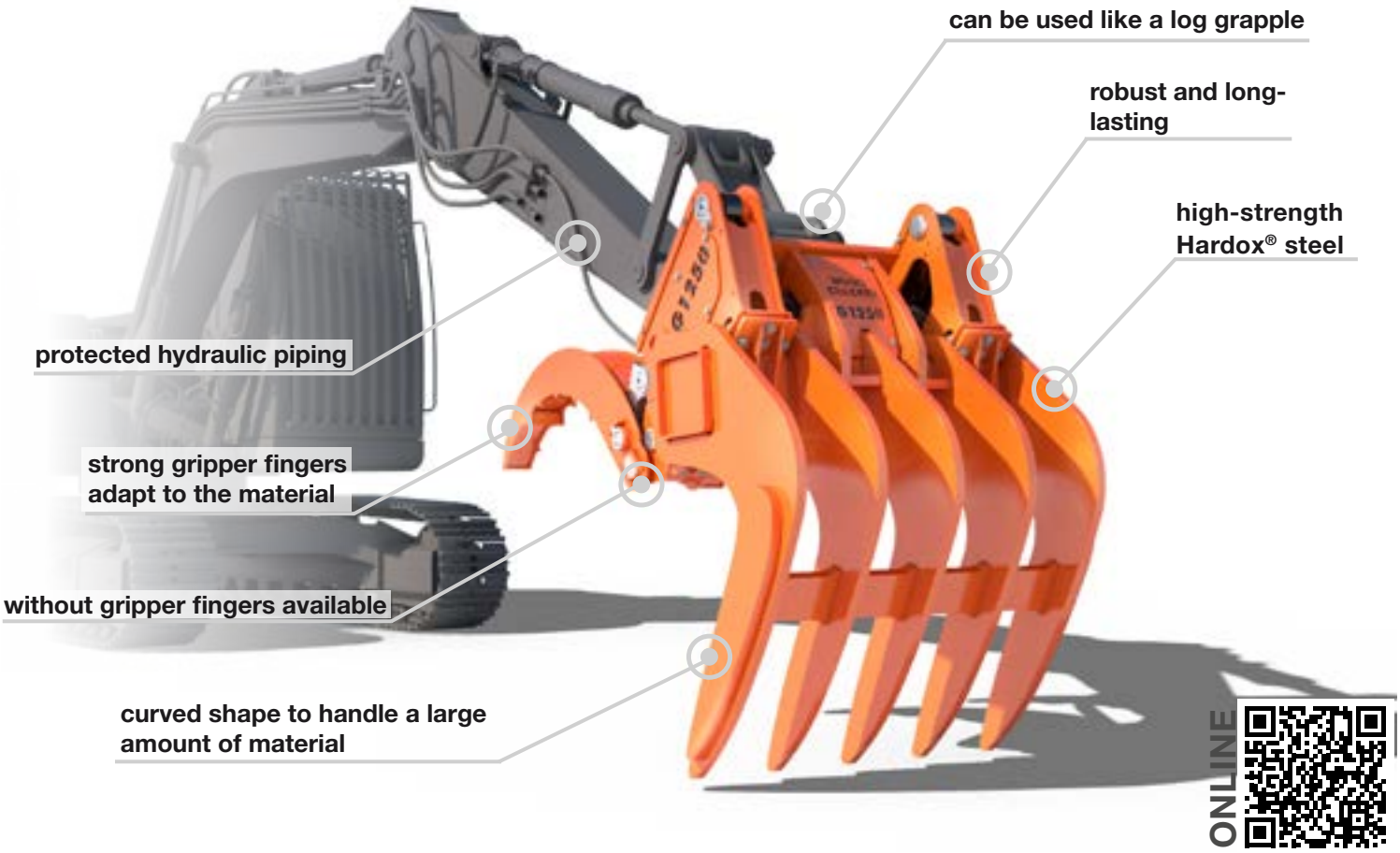

KEY FACTS

- Mountable to all conventional carrier vehicles.
- Made of high-strength and low-wear Hardox® steel and therefore robust and long-lasting.

Woodcracker® G without gripper.

APPLICATION AREAS

- Cleaning and caring for large areas.
- Collecting tree cuts and root materials.
- Landscape maintenance.
- Clearing small root stocks.
- Supporting follow-up machines (transport and chipping).
- Manipulation of the harvested product.

OPTION

- Feinrechen:
  Easy attachment to Woodcracker® G. Used for Thorough and extensive floor cleaning.

The clearing rake to prepare tree cuts and materials on the forest floor.

Sample applications from practice.

Mountable to all common carrier vehicles.

G1250 with Finescreen.

Clearing and caring of large areas.

Maximum capacity.

• available - not available

Technical Data **WOODCRACKER® G**	G 850	G 1250	G 1650	
Work width	580	1250	1650	mm
Weight (incl. gripper fingers)	585	1420	1610	kg
Recommended pump flow capacity	40 - 60	50 - 90	50 - 90	l/min.
Recommended operating pressure	200 - 250	200 - 250	120 - 250	bar
Service weight of carrier vehicle	7,5 - 15	15 - 22	20 - 25	t
Optional: Gripper fingers	•	•	•	
Optional: Finescreen	•	•	•	

Technical data and illustrations are not binding. Subject to changes for reasons of further development.

MULCHER

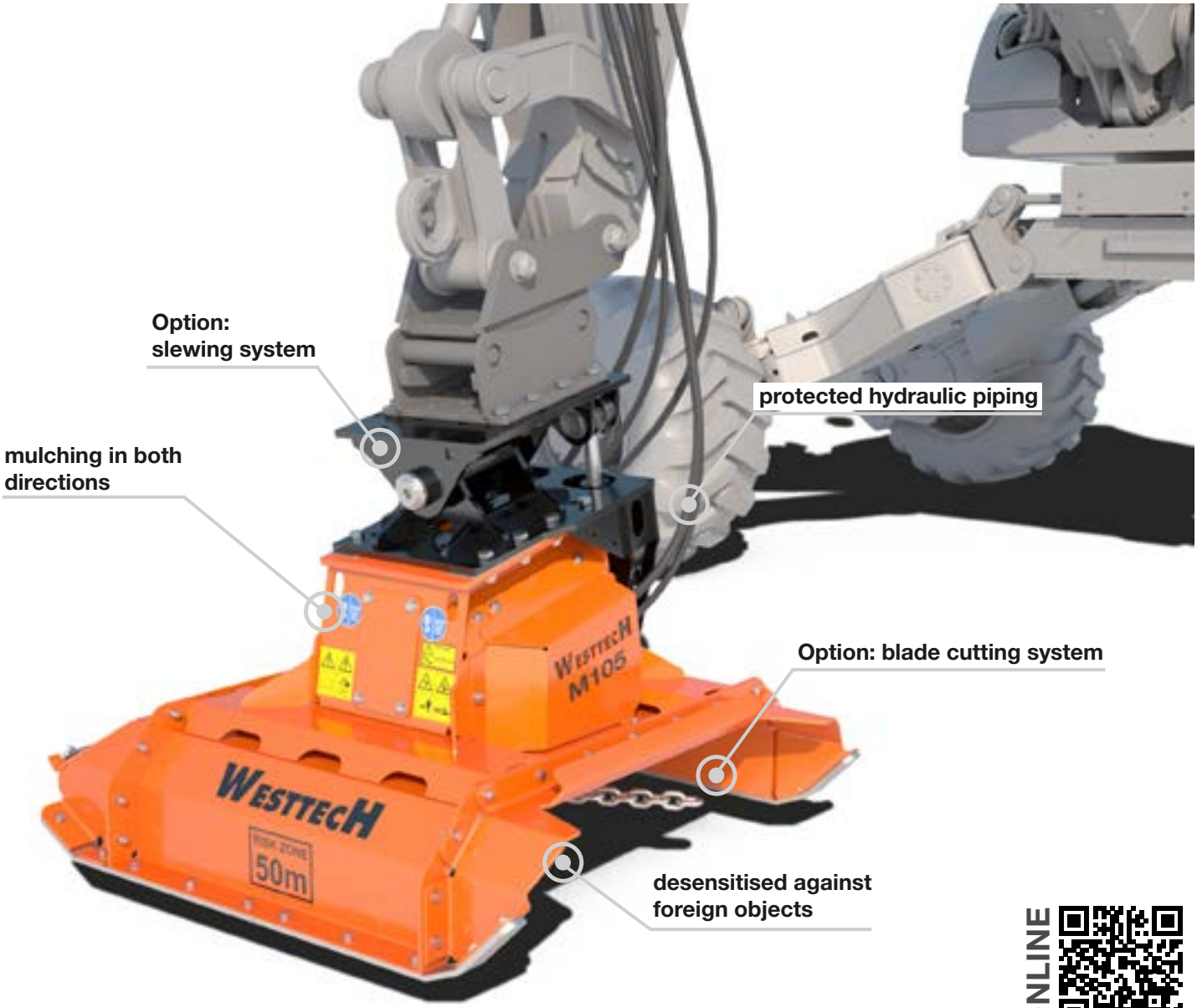

ONLINE

KEY FACTS

- Ideal cutting width for road and embankment maintenance.
- Robust workmanship, low-wear mulching system.
- Desensitised against foreign objects.
- Attachment to conventional excavators from 7 to 14 tonnes.
- Optional cylinder slewing gear available for mulching in slopes and hillsides.
- Ideal add-on for forest soil care.
- Mulching in both directions spares empty run.

APPLICATION AREAS

- Maintenance of overgrown green areas, if mowing or grazing is unfeasible.
- Maintenance of roadsides and slopes.
- Maintenance of banks and wooded terrain.

The excavator-mounted Mulcher for professional landscape maintenance of overgrown greens.

Sample applications from practice.

Mulching in both directions possible - very efficient working method.

Optional: Cylinder swivel mechanism.

Robust workmanship.

Ideal extension for brush clearing in the forest.

Technical Data **MULCHER**		
Cutting width	1000	mm
Weight (base - full equipment)	295 - 450	kg
Recommended pump flow capacity	70 - 120	l/min.
Recommended operating pressure	200 - 300	bar
Service weight of carrier vehicle	7 - 14	t
Optional: Cylinder swivel mechanism	•	
Optional: Blade cutting system	•	

• available - not available

Technical data and illustrations are not binding. Subject to changes for reasons of further development.

MOWBLOWER®

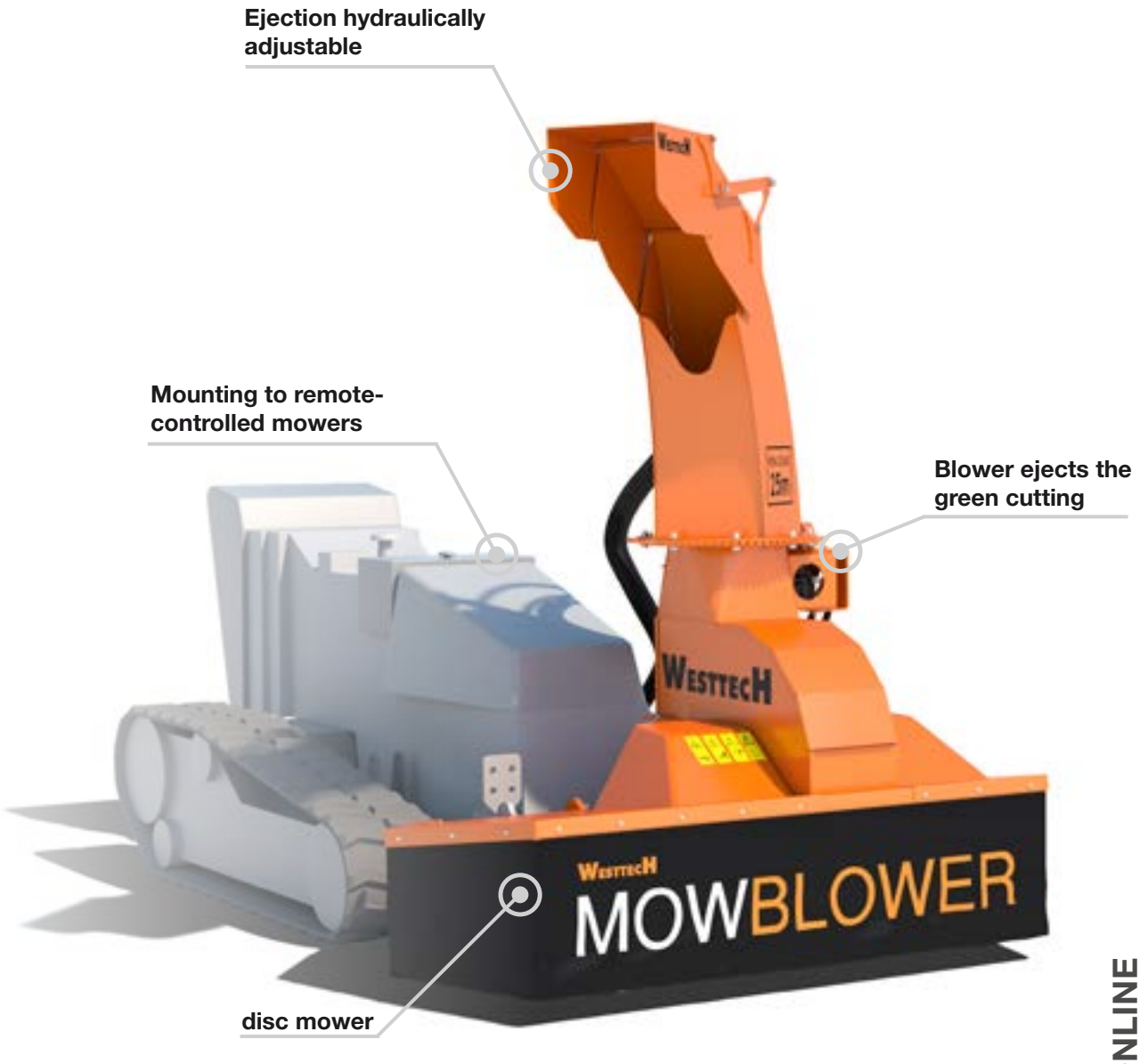

ONLINE

KEY FACTS

- Mounting to remote-controlled mowers.
- Ideal for back slopes.

APPLICATION AREAS

- Inaccessible grassland.
- Between field and meadow.
- Areas of vegetal overgrowth.
- Small back slopes.
- Brooksides and banks.
- Roadside ditches.
- Paths and unploughed strips along fields.

The mower with a blower to cultivate green areas in rough terrain.

Sample applications from practice.

The Mowblower® can be mounted to a remote-controlled mower.

Neat scenery thanks to the mowing.

In slopes and V-zones.

Mows places, an arm mower can never reach!

Patented.

● available - not available

Technical Data **MOWBLOWER®**			
Cutting diameter	1350	mm	
Weight (base - full equipment)	~ 350	kg	
Recommended pump flow capacity	50 - 60	l/min	
Recommended operating pressure	250 - 300	bar	

Technical data and illustrations are not binding. Subject to changes for reasons of further development.

Working efficiently. Worldwide.

NEXT TECH

Worldwide, pros trust in the efficient forestry machines of Westtech:

- Farmers and rangers
- Contractors for-hire
- Excavator and construction companies
- Large land owners
- Road and railway network maintenance companies
- Power utility operators
- River engineering offices
- Building departments

Sweden
Finland
Great Britain
Germany
Czech Republic
Slovak Republic
Russia
Spain
France
Greece
Italy
Turkey
Japan
South Korea
Australia
Namibia
South Africa
New Zealand

WOODCRACKER® MOWBLOWER® MULCHER

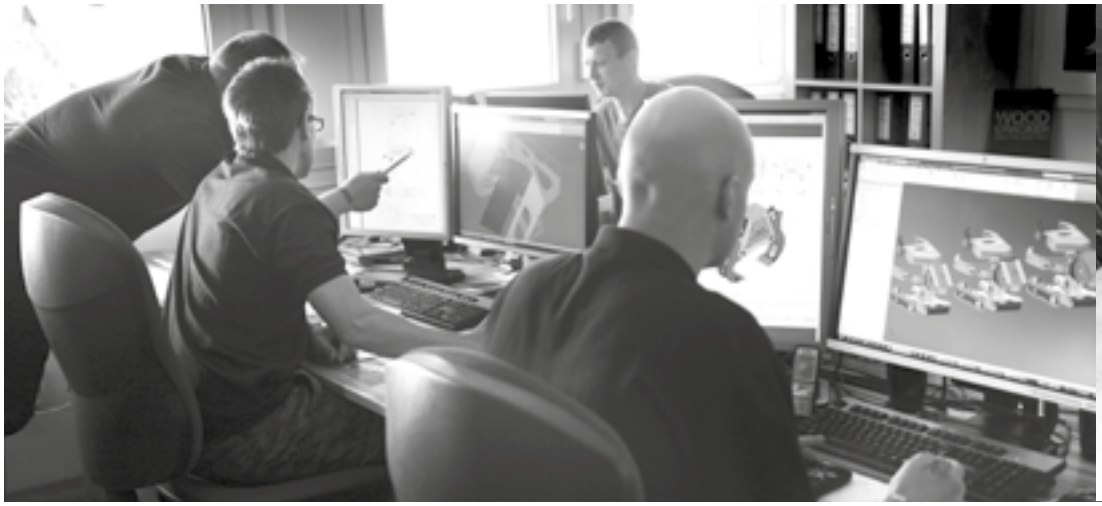

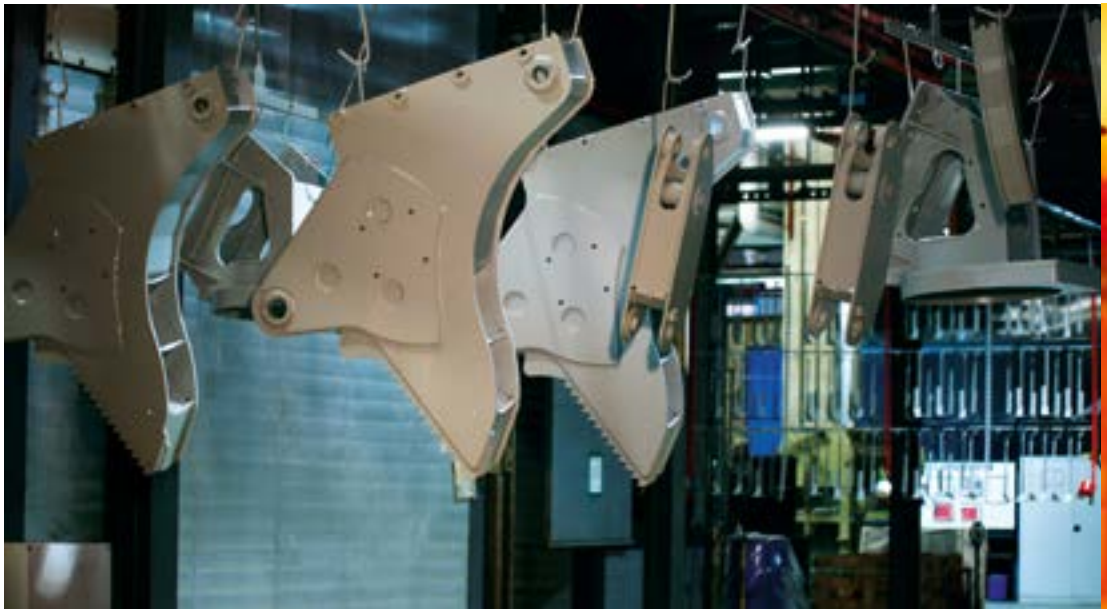

Perfection from one single source:
Our know-how – from construction to the finished Woodcracker®.

Cutting-edge coating technology guarantees the highest quality standard: Using the 6-stage cathodic dunking priming and powder coating method, a very sturdy surface structure is guaranteed which is only to be found in the automobile industry.

Forest technology and landscape maintenance

EN_2019/10

Westtech Maschinenbau GmbH, 4731 Prambachkirchen, Austria, Industriestraße 1
Tel. +43 (0)-7277-27730, Fax: +43 (0)-7277-36636, www.westtech.at, e-mail: office@westtech.at